Kostas SV3ORA informed me of his oscillator circuit which has a single J108 Field Effect Transistor and three crystals, oscillating all at the same time on their three different frequencies. His article on this oscillator met with some scepticism. People thought that one crystal should dominate, ignoring the others. You can read the forum discussion that Kostas copy and pasted and has on his web page article.

Kostas SV3ORA's triple crystal oscillator: http://qrp.gr/multiosc/index.htm

Personally I can't think of any practical uses for this right now in any of my current or future projects. But I was interested to try out the circuit and see for myself, what happens... and it shouldn't take too long, there aren't very many components to connect together, are there.

WRONG! Yes it's a simple circuit... but it is deceptive! It's a circuit that I feel I could spend days and days studying, or weeks, even. But I don't have days. So this is a simple write-up of what I did, with some points for further investigation another time (or by another person).

The first problem was that I didn't have a J108 FET. I do have some J310 FETs though. As Kostas pointed out, the J108 has a significant amount of gate-source capacitance. Therefore he didn't need to add any external capacitance, he could rely on the internal capacitance of the J108. He said a much lower capacitance device like the J310 should have maybe 150pF added across the gate to source leads. Actually in my case I found the J310 worked (2 crystals oscillating at the same time) even without the additional gate-source capacitance. My construction is rather messy. Nevertheless I don't think there would he a relatively significant amount of stray capacitance to make up the difference in gate-source capacitance.

Refer to the following circuit diagram:

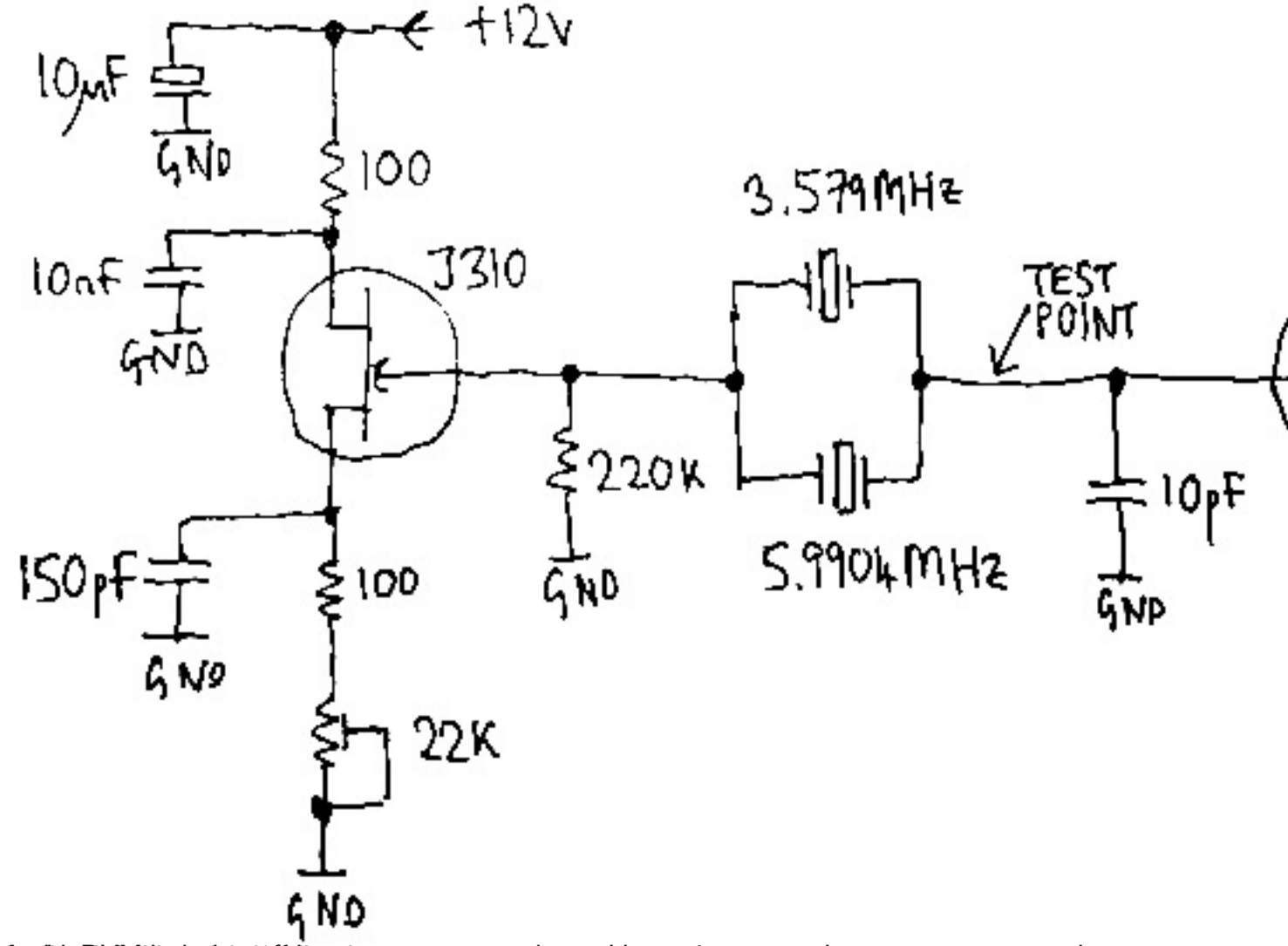
+12V
10μF
GND
100
3.579MHz
10nF
GND
J310
TEST
POINT
220K
10pF
150pF
100
GND
5.9904MHz
GND
GND
22K
GND

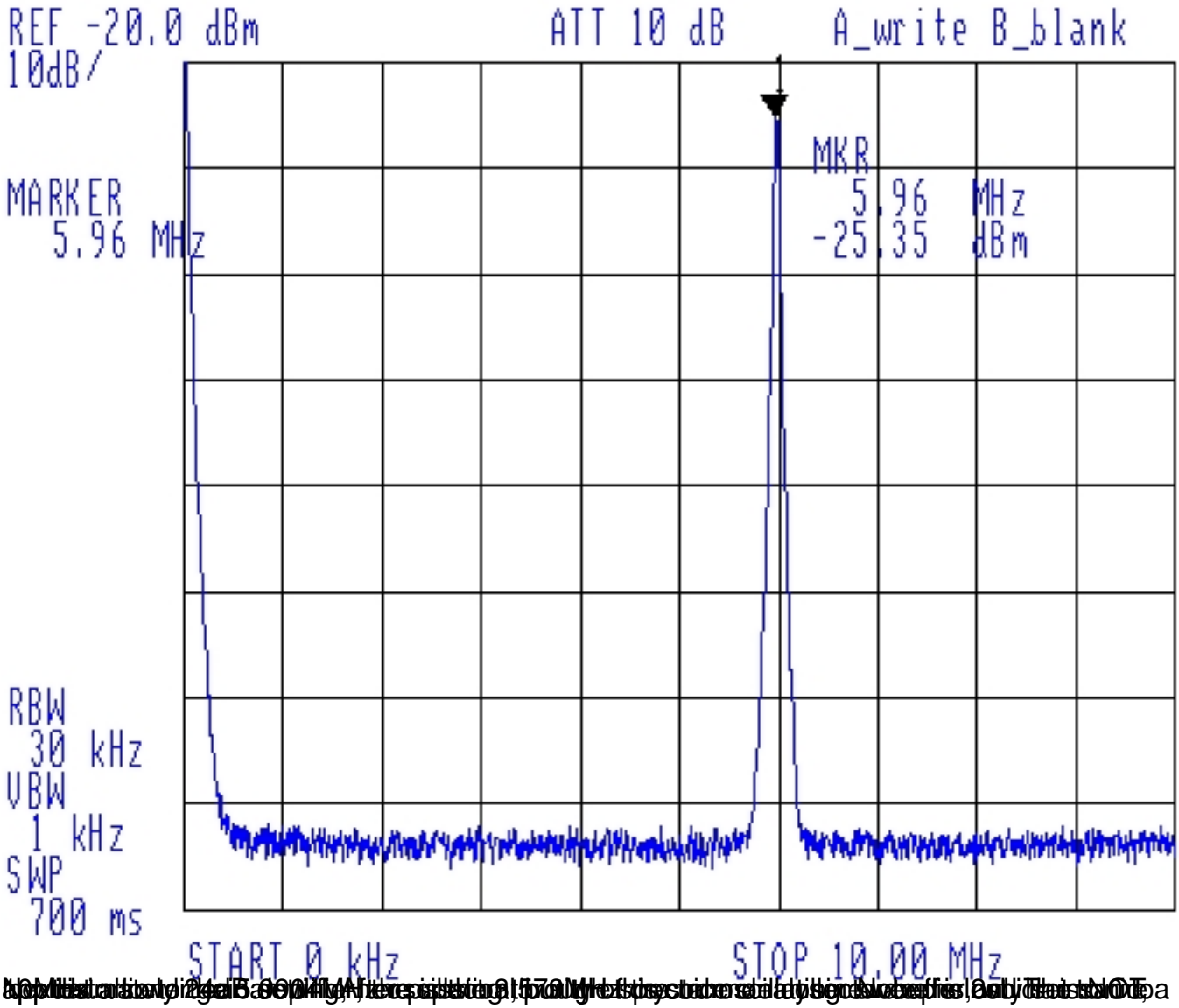
REF -20.0 dBm
ATT 10 dB
A_write B_blank
10dB/
MARKER
5.96 MHz
MKR
5.96 MHz
-25.35 dBm
RBW
30 kHz
VBW
1 kHz
SWP
700 ms
START 0 kHz
STOP 10.00 MHz

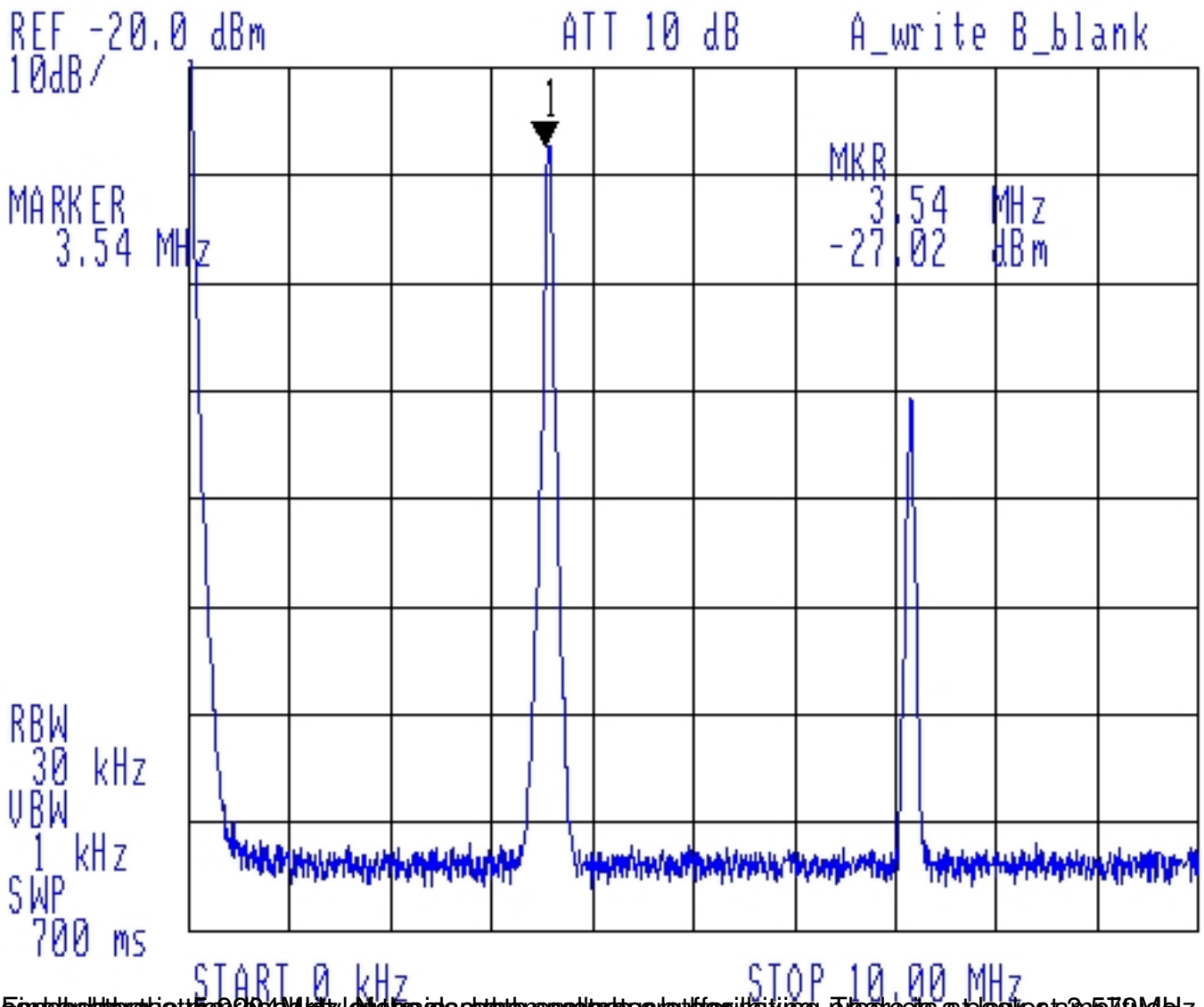

Finally, there is the 3.54 MHz low gain-both crystals are oscillating. There is a peak at 3.579 MHz, caused by the 3.579 MHz. No gain-both crystals are oscillating, there is a peak at 3.579 MHz

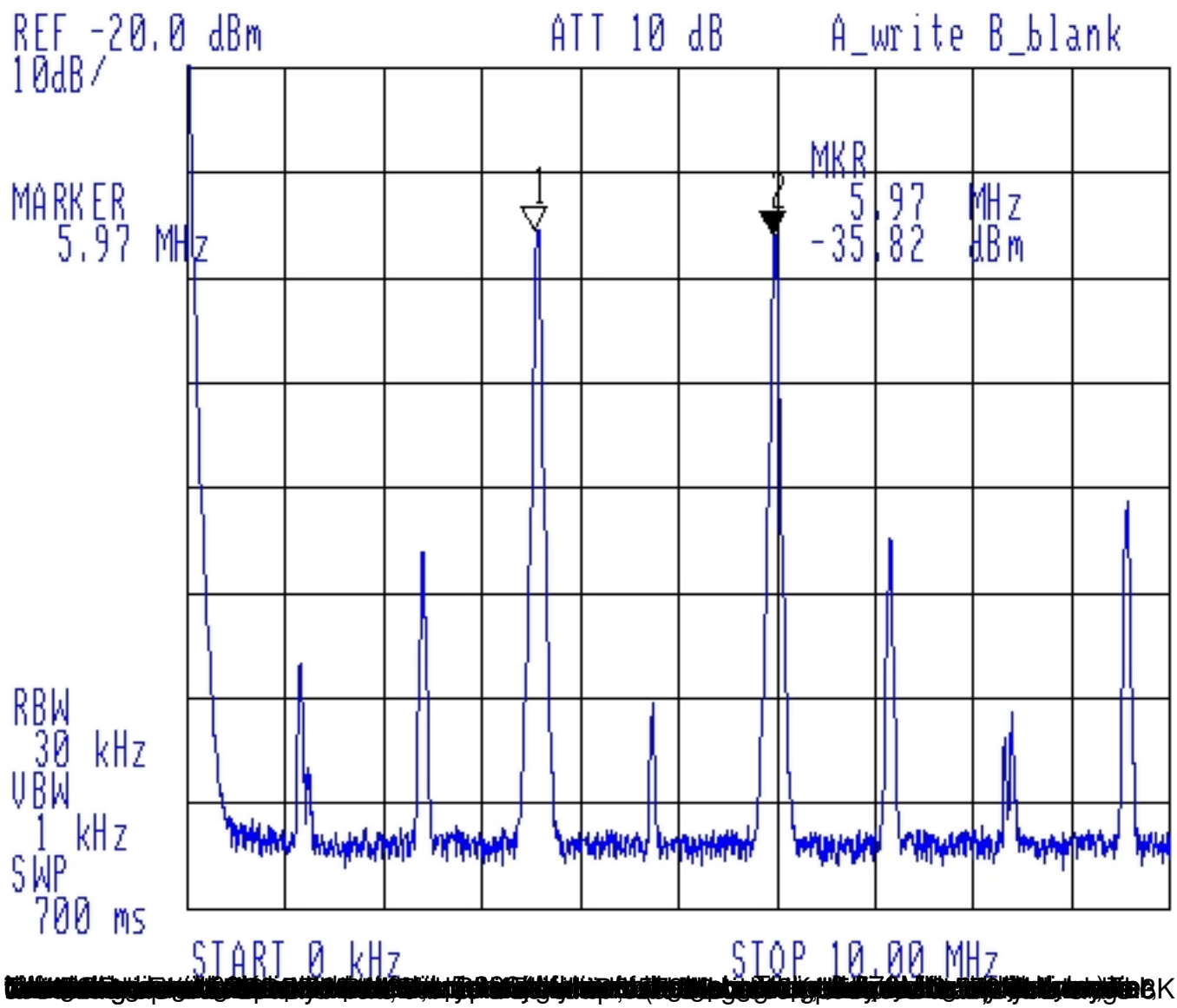
REF -20.0 dBm
ATT 10 dB
A_write B_blank
10dB/
MARKER
5.97 MHz
MKR
5.97 MHz
-35.82 dBm
RBW
30 kHz
VBW
1 kHz
SWP
700 ms
START 0 kHz
STOP 10.00 MHz

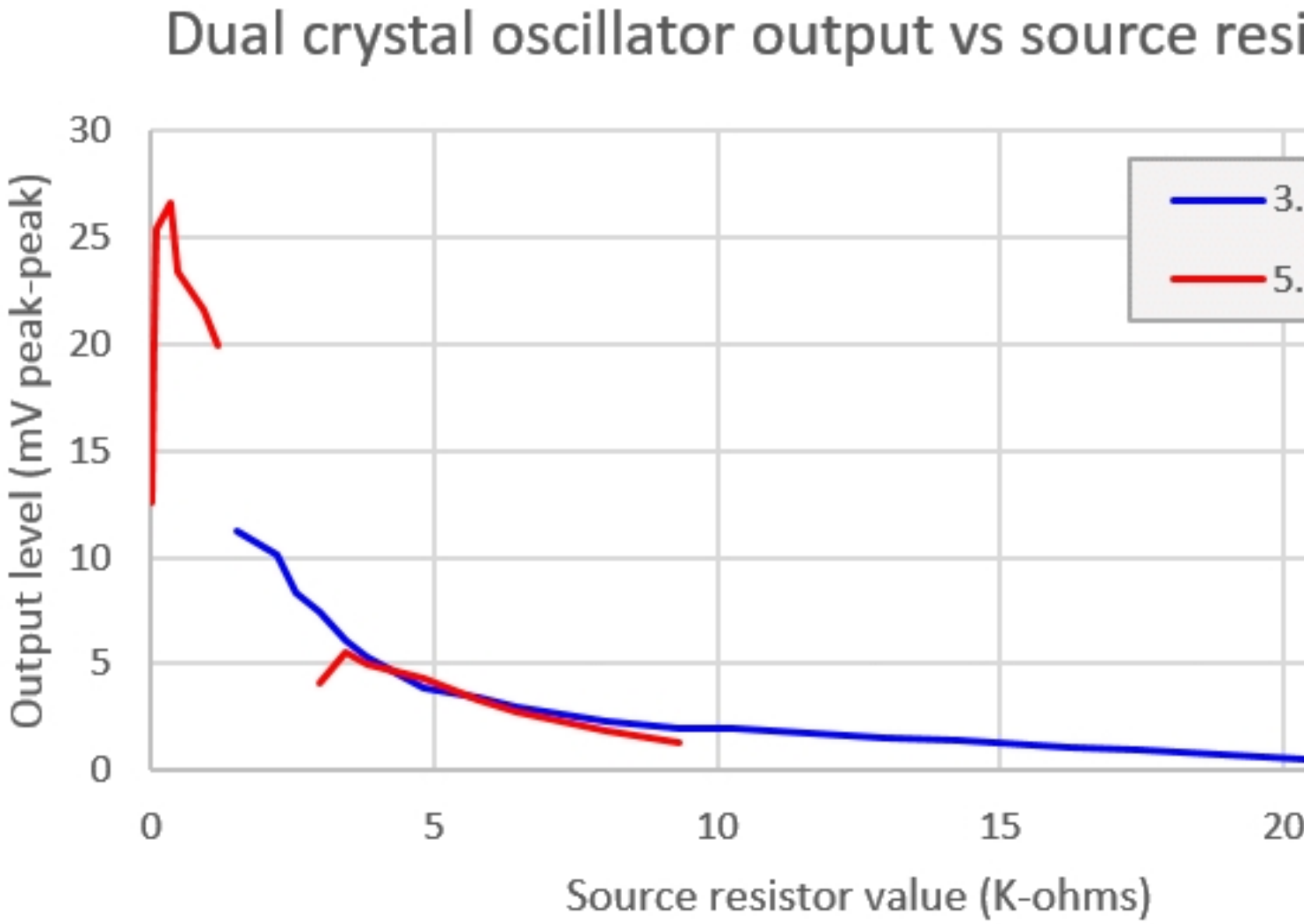
Dual crystal oscillator output vs source resi
Output level (mV peak-peak)
30
25
20
15
10
5
0
0
5
10
15
20
Source resistor value (K-ohms)
3.
5.

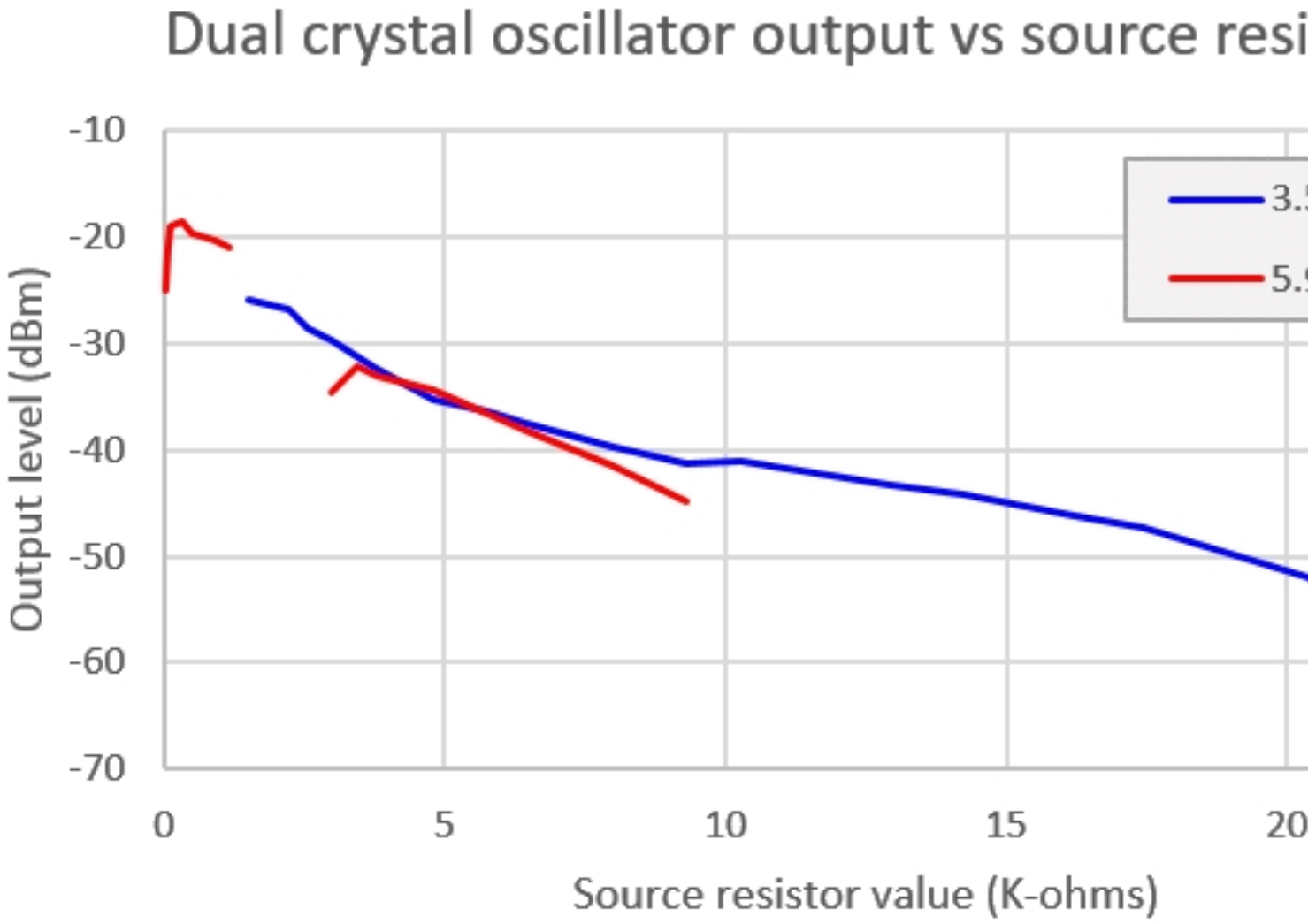

What didn't work...

I couldn't get three crystals to oscillate simultaneously the way Kostas did. I could observe at highest gain the highest frequency oscillating, then handing over to the next lower, then the lowest frequency crystal as I reduced the gain. But I could not find a point where all three oscillated at the same time.

Furthermore I could not succeed in getting EVERY pair of random crystals from my junkbox to oscillate simultaneously.

Further investigation...

So clearly this oscillator really does operate on multiple crystal frequencies simultaneously. I feel that a lot more study could be done, to completely understand how it works and why; and what are the necessary conditions for it to work. As I said, I really don't have time now... but

here is what I would like to investigate, if I did have time:

1. Effect of adding different amounts of gate-source capacitance to the J310
2. Effect of different amounts of capacitance to ground, or loading, at the other end of the crystal (where I put 10pF)
3. How to make three crystals oscillate together, as Kostas did?
4. Investigate a variable amount of series resistance (some 10's of ohms) in series with each crystal to try to equalise the activity of the crystals - which might make make it easier to get them to oscillate together at the same time
5. What is the effect on the actual oscillation frequency of the crystal? Is it pulled some amount?
6. Use of a more linear buffer, to investigate the spectral purity of the oscillations